Control Law Design and Optimization for Rotorcraft Handling Qualities Criteria Using CONDUIT

Jason D. Colbourne and Chad R. Frost
Cal Poly Foundation
California Polytechnic State University
San Luis Obispo, CA 93407

Mark B. Tischler
Army/NASA Rotorcraft Division
Aeroflightdynamics Directorate (AVRDEC)
U.S. Army Aviation and Missile Command
Ames Research Center
Moffett Field, CA 94035-1000

Kenny K. Cheung and Douglas K. Hiranaka
Raytheon ITSS
Ames Research Center
Moffett Field, CA 94035-1000

Daniel J. Biezad
Aeronautical Engineering Department
California Polytechnic State University
San Luis Obispo, CA 93407

Abstract

Flight control design studies of the SH-2F Sea Sprite and RASCAL JUH-60A Black Hawk helicopters have been performed using the Control Designer's Unified Interface (CONDUIT) software package. Both studies performed optimizations of control law gains for system performance relative to the ADS-33D handling qualities specification. The SH-2F study included a sensitivity analysis to determine the relevant design parameters for final optimization. The RASCAL Black Hawk study included a study of design margin variations to show the trade-off between actuator dynamic behavior and handling qualities performance. The following summary points were noted:

1. The SH-2F flight control system was successfully optimized for Level 1 handling qualities with the exception of roll and yaw attitude quickness.

2. The sensitivity analysis tools used for the SH-2F study successfully provided a means to constrain the over-parameterized problem to a form that could be optimized.

3. The RASCAL Black Hawk optimization successfully tuned the RASCAL control laws from Level 2 to Level 1 with the exception of yaw attitude quickness.

4. The RASCAL Black Hawk design margin study showed that 5% design margin gave the best performance without excessive actuator activity.

Presented at the American Helicopter Society 55th Annual Forum, Montreal, Quebec, Canada, May 25–27, 1999.
Copyright © 1999 by the American Helicopter Society, Inc. All rights reserved.

Glossary of Terms

ADOCS	Advanced Digital Optical Control System
ADS-33	Aeronautical Design Standard defining handling qualities requirements for military rotorcraft
CONDUIT	Control Designer's Unified Interface software package
FCS	Flight Control System
MTE	Mission Task Element
PID	Proportional-Integral-Derivative controller

RASCAL	Rotorcraft Aircrew Systems Concepts Airborne Laboratory, a JUH-60 Black Hawk helicopter with digital fly-by-wire control system
RCAH	Rate Command Attitude Hold
STI	Systems Technology Incorporated
UCE	Usable Cue Environment, as referenced in ADS-33D

Introduction

The evaluation of simulation models against ADS-33 (Ref. 1) quantitative rotorcraft handling qualities metrics has, in the past, been a time consuming effort, involving many individual analyses in both the time and frequency domains. Manual tuning of control system parameters to meet handling qualities and performance specifications has been cumbersome and complicated. Performing rigorous trade-off studies for numerous variations in the control system is too time consuming to be practicable, and the competing requirements of the specifications make it difficult to understand how variations in the design affect satisfaction of individual specifications. With the complex interaction of time- and frequency-based specifications for the closed- and broken-loop responses, it is difficult to know if the design makes the most effective use of the available control power. The Control Designer's Unified Interface (CONDUIT) software package[2] makes possible rapid optimization and trade-offs of design configurations against handling qualities specifications.

This paper describes two design trade-off studies that have been generated with CONDUIT.

The first case examines the process of designing a new control system for an existing helicopter. This design is based on a simulation study[3] of Kaman Aerospace's SH-2F Sea Sprite helicopter with an updated flight control system (FCS) design. This design serves as an indicator of the performance potential of the SH-2F airframe when coupled to a modern FCS. The SH-2F study highlights the use of CONDUIT's sensitivity analysis tools to correctly parameterize the design problem and ensure a successful optimization.

The second case focuses on the RASCAL Black Hawk helicopter.[4] CONDUIT is currently being used in the RASCAL program at Ames Research Center to evaluate the baseline control system. The RASCAL model presented in this paper is significantly more accurate than that used in earlier work.[2]

CONDUIT allows a design margin to be imposed, which ensures that an optimized control system will exceed all Level 1 minimum specification requirements by a specified percentage. Such overdesign prevents the optimized aircraft performance from lying on the Level 1/Level 2 boundary, where performance would be degraded to Level 2 by off-design conditions. The SH-2F study uses a 10% design margin to improve design robustness. For the RASCAL study, a range of design margins (from 0% to 20%) is evaluated; some fundamental trade-offs between performance and actuator activity are shown.

Overview of CONDUIT

A detailed description of the development and use of CONDUIT has been previously presented[2] and will not be repeated in this paper. However, a brief overview of the software's functionality is required to understand the design studies presented in the subsequent sections.

CONDUIT incorporates aircraft math models, control system performance, handling qualities evaluation, and multi-objective optimization into a single interactive environment. CONDUIT is built on top of the MATLAB/SIMULINK dynamics modeling and analysis environment,[5] which includes a graphical block diagram editor. Key components of the system are a multi-objective function optimization algorithm and a comprehensive set of aircraft-oriented specifications. These components are united in CONDUIT's graphical user interface for visualization and optimization of aircraft and control law performance.

Currently, there are six graphical libraries comprising more than 100 specifications in CONDUIT:

1. Rotorcraft in hover/low-speed flight.[1]
2. Rotorcraft in forward flight.[1]
3. Fixed-wing lateral/directional characteristics.[6,7]
4. Fixed-wing longitudinal characteristics.[6,7]
5. Short Takeoff and Vertical Landing (STOVL) characteristics.[8]
6. General flight control system characteristics.[9]

Three levels of compliance are defined for each specification following the handling-qualities levels convention.[1,6] In the Level 1 region, the aircraft characteristics are "satisfactory without improvement," and this

is the desirable performance region. In the Level 2 region, "deficiencies warrant improvement." In this region, performance is adequate and may be acceptable under degraded system operations or for flight outside the design flight envelope. In the Level 3 region, "deficiencies require improvement," performance is inadequate, and the mission task will be compromised (Fig. 1).

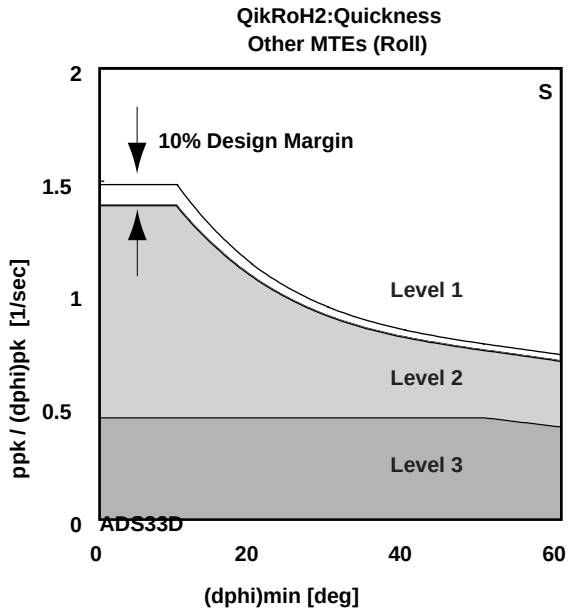

Fig. 1 ADS-33D roll quickness specification with a 10% design margin.

The user selects the desired specifications from the CONDUIT libraries to incorporate them in the design problem. CONDUIT then evaluates the math model against the chosen specifications. The user declares each specification to belong to one of five classes: hard constraint, soft constraint, performance objective criterion, summed objective, or check only. The selection of specification class defines the solution strategy for the optimization process. CONDUIT uses the Feasible Sequential Quadratic Programming (FSQP) algorithm[10,11] and conducts system optimization in three distinct phases.

In Phase 1, the design parameters are tuned to ensure that the hard constraints are satisfied; typically, these specifications evaluate absolute stability (the Routh eigenvalue criterion, for instance), relative stability (gain and phase margin, for instance), and other specifications that *must* meet the Level 1 requirements. Only if the hard constraints meet the Level 1 criteria can the optimization process move into Phase 2.

In Phase 2, CONDUIT begins to work on the soft constraints, while maintaining satisfaction of the hard constraints. Most of the problem's specifications are declared as soft constraints. This allows CONDUIT to find a solution that does not strictly meet all the Level 1 requirements, but that may reach the best possible compromise. If the design satisfies the Level 1 requirements for all of the soft constraints, CONDUIT has achieved a "feasible solution." Since any design that resides in the Level 1 region is feasible, Phase 2 optimization actually reaches a "family" of design solutions. The optimization process enters Phase 3 if the hard and soft constraints are satisfied.

In Phase 3, CONDUIT tunes the design parameters to optimize the system to the objective performance criteria, while keeping the hard and soft constraints in the Level 1 region. The Phase 3 optimization will find the design from the family of feasible solutions that makes the most effective use of the available control power.

CONDUIT accommodates uncertainty in the simulation mathematical model and changes in actual flight condition relative to the reference condition by allowing the user to include a "design margin," as illustrated in Fig. 1. The design margin enforces overdesign to ensure that acceptable solutions lie a set distance into the Level 1 region and not on the Level 1/Level 2 border. This builds in design robustness. For example, a 10% design margin would set the acceptable border 10% of the width of the Level 2 region into the Level 1 region, as shown in Fig. 1. Thus, in flight, the control system performance can degrade into this design margin without entering the Level 2 region. Design margins can be systematically adjusted to quickly retune the design and generate tradeoff curves.

Design Study for the Kaman SH-2F at 35 Knots Forward Flight

The SH-2F control system design study was conducted in support of an ongoing effort by Kaman Aerospace to develop a digital FCS for the SH-2G helicopter.[12] The Army/NASA Rotorcraft Division's Flight Controls group developed a control system model for the SH-2F helicopter as a preliminary assessment of the ability of the SH-2G to meet modern performance requirements.

CONDUIT was used to model and modify the control system, and to select the appropriate initial design parameters. Performance of the SH-2F with this control system was evaluated against a combination of stability, performance, and ADS-33D handling qualities criteria.

The control system gains were optimized by minimizing actuator activity and crossover frequency simultaneously for all four rotorcraft response axes, while maintaining Level 1 handling qualities and ensuring adequate stability margins.

Description of Helicopter and Control Laws

The Kaman H-2, first flown in 1959, is a compact, all-weather helicopter designed for Naval ship-based operation.[3] The SH-2F configuration is shown in Fig. 2. The SH-2F has several unique characteristics of significance to control system designers. To achieve a wings-level hover attitude, the rotor mast is canted forward and to the left, six degrees in each axis. Control of the main rotor is accomplished through a servoflap mechanism unique to Kaman helicopters. A servo-driven flap on the trailing edge of each rotor blade is used to change the pitch of the blades, both cyclically and collectively.

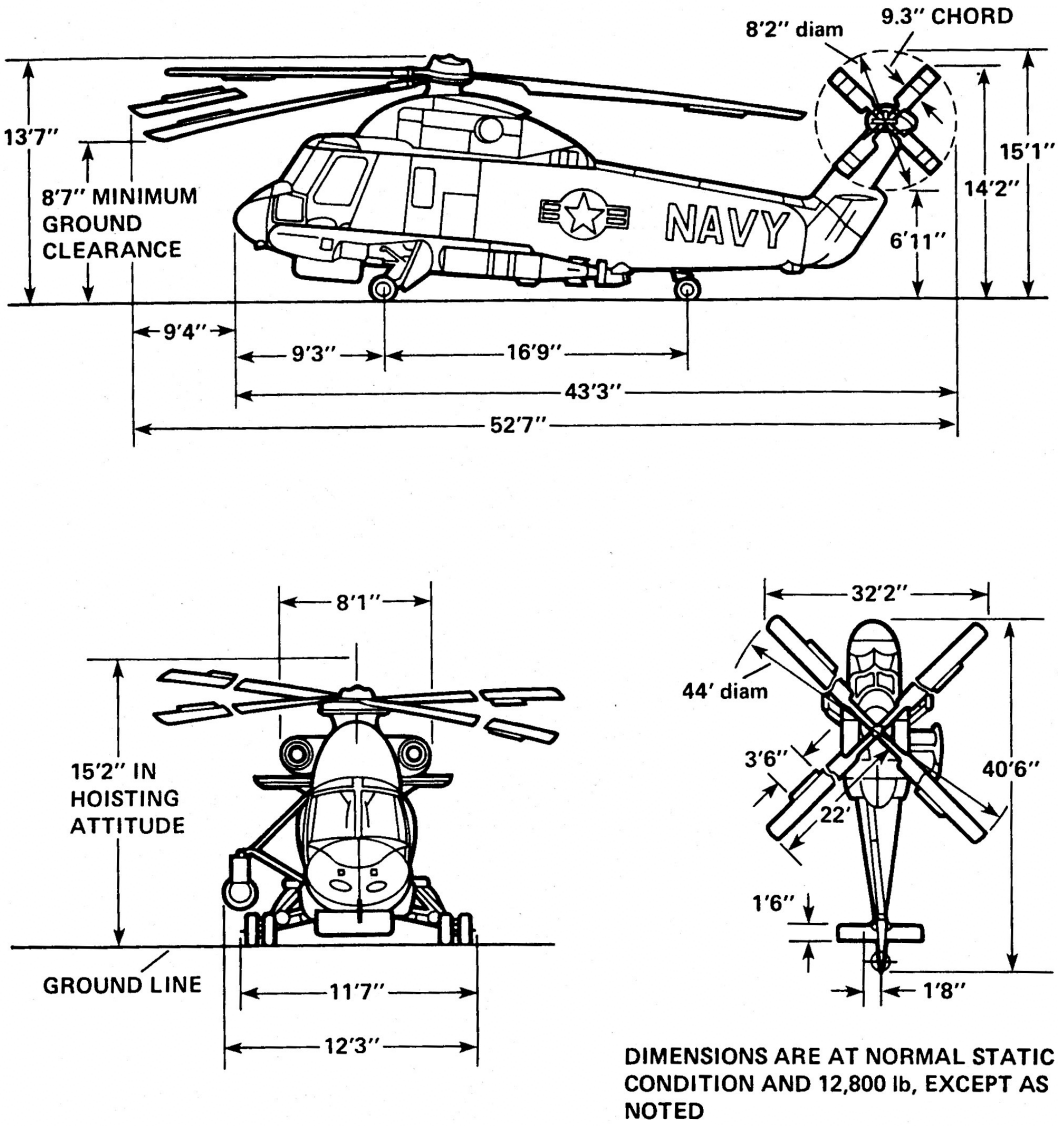

Fig. 2 Kaman SH-2F.

In 1982, the U.S. Navy's NAVTOLAND (Ref. 13) program examined the design of a new control system for the SH-2F. Under contract to the NAVTOLAND program, Systems Technology Inc. (STI) developed a control system design that utilized a model-following architecture. The rate command/attitude hold (RCAH) portion of the NAVTOLAND architecture was selected as a starting point for this investigation because substantial information on the design and performance of that control system was available in the contractor's report.

In this study, the 35 knot forward flight condition was evaluated; a six-degree-of-freedom linearized math model was constructed for this flight condition, using the stability and control derivatives and trim conditions identified from a Navy nonlinear simulation.[13] The block diagram used to model the control system is shown in Fig. 3.

Each of the four control channels was stabilized with proportional, integral, and derivative (PID) controller elements; the PID gains for each controller were used as tunable design parameters. The second-order command models for the pitch and roll channels each used two design parameters, explicitly formulated as damping ratio (ζ) and natural frequency (ω). The second-order collective and yaw command models each used an inverse time constant as the design parameter. Examples of the model-follower and command model block diagrams are shown in Fig. 4; while the pitch channel is shown, the design of the other channels is similar. The baseline values for the design parameters were calculated using classical design techniques and the CONDUIT Analysis Tools.[14] Table 1 lists all of the design parameters together with their functions in the control system and their corresponding values.

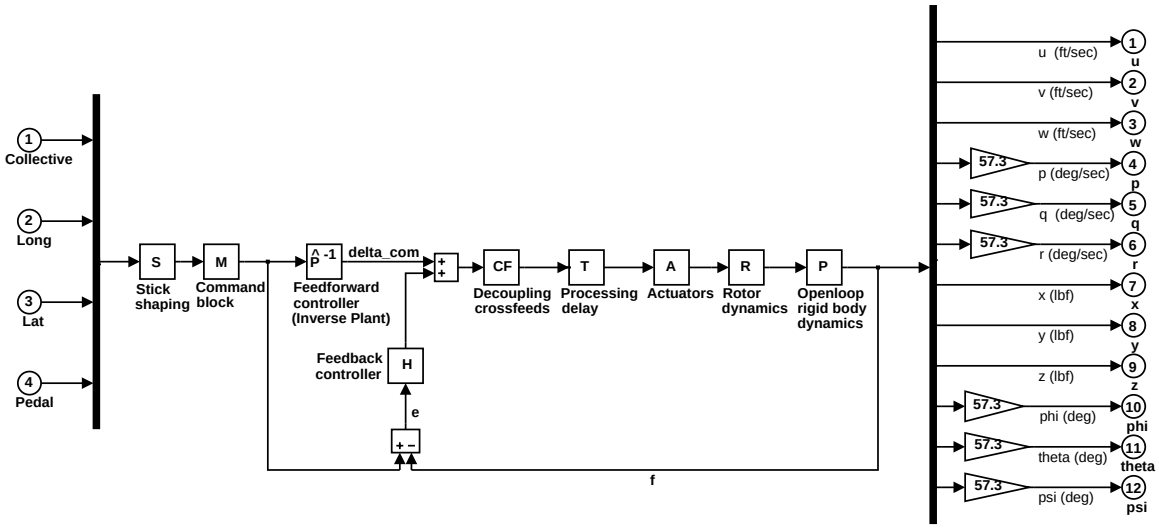

Fig. 3 SH-2F SIMULINK block diagram.

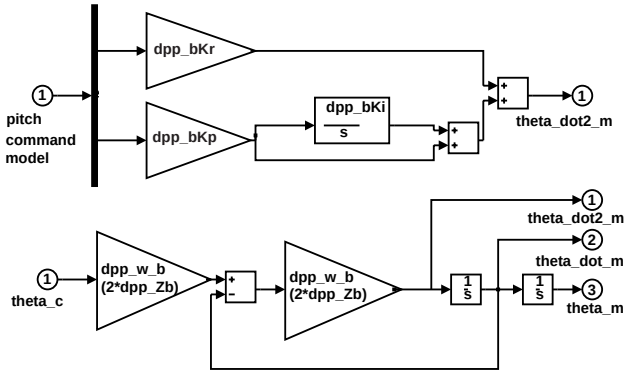

Fig. 4 Stabilization (H) and Command Model (M) block diagrams.

Table 1 SH-2F Design Parameters

Design Parameter	Control Channel	Function of Parameter	Baseline Value	Optimized Value	Change (%)
dpp_cKp	Collective	Proportional gain in PID controller	0.09	0.031	–66
dpp_cKi	Collective	Integral gain in PID controller	0.2	0.527	163
dpp_cTm	Collective	Time constant in command model	1	2.473	147
dpp_bKp	Pitch	Proportional gain in PID controller	3.96	3.2833	–17
dpp_bKi	Pitch	Integral gain in PID controller	0.1818	0.0512	–72
dpp_bKr	Pitch	Rate gain in PID controller	1.8	1.0534	–41
dpp_Zb	Pitch	Damping ratio in command model	0.8	0.9522	19
dpp_w_b	Pitch	Natural frequency in command model	2.5	1.548	–38
dpp_aKp	Roll	Proportional gain in PID controller	5.64	5.1606	–8.5
dpp_aKi	Roll	Integral gain in PID controller	0.2872	0.2003	–30
dpp_aKr	Roll	Rate gain in PID controller	0.8	0.9998	25
dpp_Za	Roll	Damping ratio in command model	0.8	1.0107	26
dpp_w_a	Roll	Natural frequency in command model	2.5	1.3944	–44
dpp_pKp	Yaw	Proportional gain in PID controller	1.2017	1.0924	–9.1
dpp_pKi	Yaw	Integral gain in PID controller	0.1789	0.6879	285
dpp_pKr	Yaw	Rate gain in PID controller	0.6325	0.2258	–64
dpp_pTm	Yaw	Time constant in command model	0.6667	0.5144	–23

Selection of Specifications

Choosing the specifications and the corresponding constraint categories needed to optimize a control system is a crucial step in the development of a CONDUIT problem definition. Specifications must be selected to define the desired handling qualities and the acceptable limits of performance. Constraints that ensure stability must also be imposed, because the handling-qualities and performance specifications do not themselves guarantee a stable response.

The servoloop specifications for eigenvalue location (CONDUIT label EigLcG1, as seen in Fig. 5; specifications following are denoted similarly) and stability margins (StbMgG1) were chosen to be hard constraints to ensure that stable responses would be achieved throughout the iteration process.

The ADS-33 requirements selected for this study were:

1. Bandwidth and phase delay for small amplitude attitude changes (BnwAtH1, BnwYaH2).

2. Heave-to-yaw coupling (CouYaH1).

3. Coupling of pitch to roll and roll to pitch (CouPRH1).

4. Heave-to-pitch coupling (CouLVH1).

5. Heave frequency (FrqHeH1).

6. Pitch, roll, and yaw attitude quickness (QikPiH2, QikRoH2, QikYaH2).

7. Attitude hold in response to disturbances (HldAtH2).

8. Damping ratio calculated from time-response overshoot (OvsAtH1).

All of the ADS-33 requirements were set as soft constraints.

Some ADS-33 specifications have different requirements based on the assumed pilot workload and operational environment; for this study, nonaggressive Mission Task Elements (MTEs) were used. A 10% design margin was imposed on all specifications, to ensure that modeling uncertainties will not cause real-world performance to degrade to Level 2.

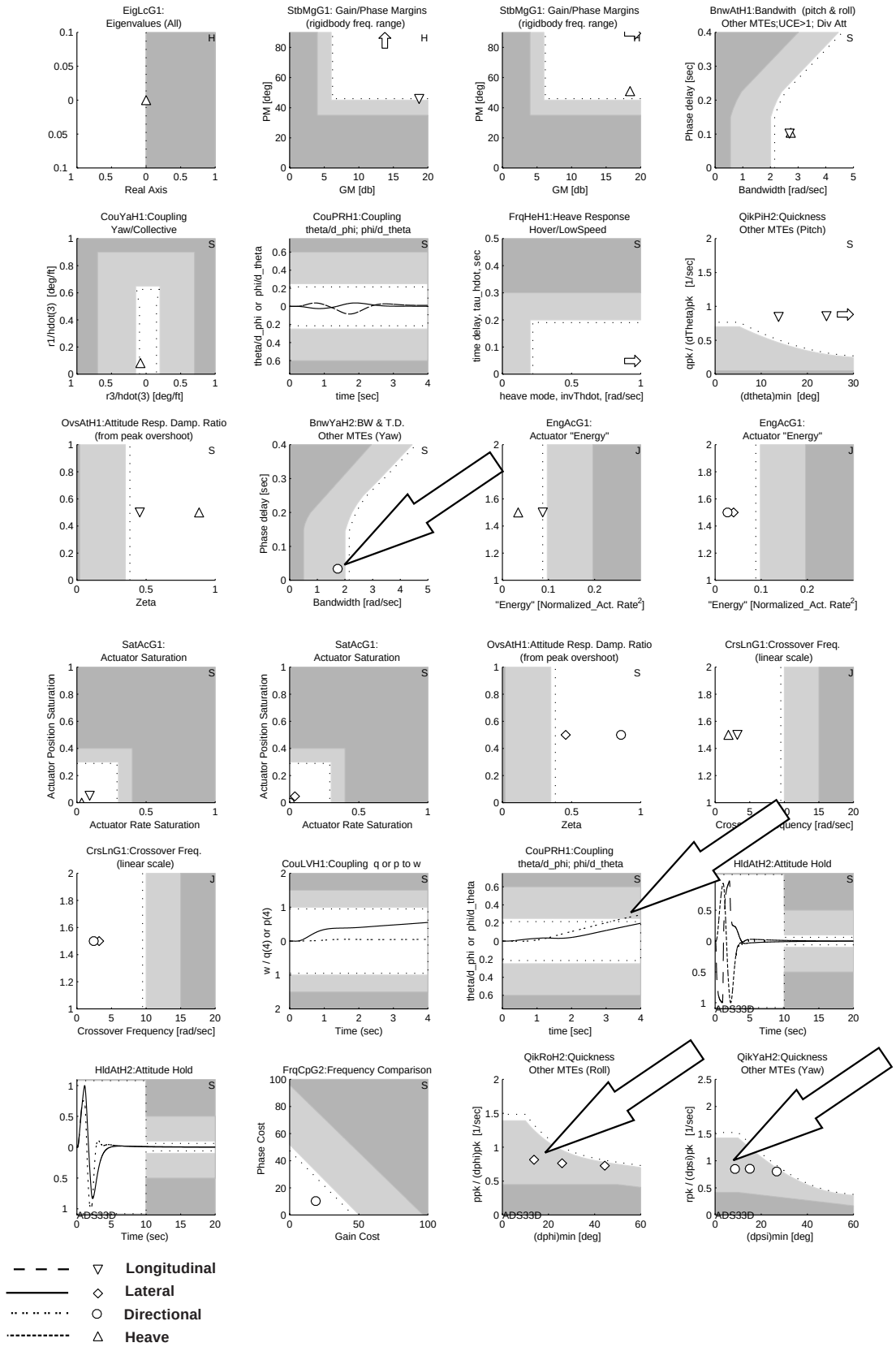

Fig. 5 Baseline results.

Two additional servoloop specifications were selected as soft constraints. A specification for maximum allowable actuator saturation (SatActG1) was adopted for all four control channels, to keep actuator rate and position saturation below 30%. A model-following specification compared the frequency responses of the yaw command model and the final yaw output (FrqCpG2), to constrain coupling from the pitch and roll channels.

Servoloop specifications for actuator energy (EngAcG1) and crossover frequency (CrsLnG1) for each of the control channels were chosen to be the objective constraints. They were specified as summed objectives, so the sum of the values is treated as the Phase 3 objective constraint. This ensures that the performance of one control channel will not dominate the optimization at the expense of the other channels. Minimizing actuator energy and crossover frequency drives the control system to meet the requirements of the other constraints with a minimum of control activity.

Baseline Performance

The performance of the baseline configuration was evaluated against the selected set of specifications using CONDUIT. The results are shown in Fig. 5. In the figure, upright triangles are used for the collective channel, inverted triangles are used for the pitch channel, diamonds are used for the roll channel, and circles are used for the yaw channel. The majority of the specification results are in the Level 1 region. Only the results of the yaw bandwidth specification, pitch and roll coupling specification, and the roll attitude quickness and yaw attitude quickness specifications were in the Level 2 region, as highlighted in the figure.

Initial Optimization Results

Optimization was performed on the SH-2F problem using CONDUIT. No satisfactory set of design parameters was found which satisfied the roll and yaw quickness, even with the design margin removed. The SH-2F aircraft was not developed to meet the stringent requirements of ADS-33, so it is not surprising that these specifications could not be met. The roll and yaw quickness requirements were thus relaxed to match the pitch quickness specification, and the problem was reoptimized. With the revised quickness requirements, the optimization was able to drive all of the specifications into the Level 1 region. With all of the hard and soft constraints satisfied, the CONDUIT optimization continued into Phase 3, trying to minimize the actuator energy and crossover frequency objective constraints. After six iterations, the optimization failed to reduce the objective constraints further, although freedom to do so existed. The CONDUIT Sensitivity Analysis Tools were then employed to determine the reason for the impasse.

Use of Sensitivity Tools

Local gradients found through the perturbation of design parameters at one design point in the optimization can be used to produce metrics of the *insensitivity* of design parameter variation and the *correlation* of design parameters. An insensitive design parameter is one for which changes made to the parameter will have little or no effect on the value of the specifications. Changes made to design parameters that are correlated will have nearly the same effect on the value of the specifications, meaning one or more of the correlated parameters is redundant. The CONDUIT Sensitivity Tools provide the designer with graphical displays of the level of insensitivity and correlation for each design parameter.

The presence of insensitive and/or correlated parameters is indicative of over-parameterization of the design problem at that particular point in the optimization. The values of insensitive or correlated design parameters can be frozen and removed from the optimization process, at the discretion of the designer. After the order of the problem has been reduced in this manner, the optimization will be able to determine an appropriate direction to proceed.

Insensitive Parameters. Using the CONDUIT Sensitivity Tools, the insensitivities of the design parameters were calculated. The four integrator gains (dpp_aKi, dpp_bKi, dpp_cKi, and dpp_pKi), the yaw channel rate gain (dpp_pKr), and the pitch and roll command model damping ratios (dpp_Za and dpp_Zb) were found to have insensitivities greater than any of the other parameters, as seen in Fig. 6. These parameters were frozen, and the design was reoptimized with CONDUIT. However, the optimization was still unable to make any progress, even after all design parameters with large insensitivities were frozen.

Correlated Parameters. With the design parameters of highest insensitivity removed from the analysis, the correlated parameters could be identified. A plot of the confidence ellipsoids for the optimization is shown in Fig. 7. Each column presents the correlation between the design parameter labeled at the top of the column and all other design parameters, labeled at the left. The values in each column are normalized to the largest value, thus a value of one indicates that the two parameters have similar effect on the specifications—with lower values indicating diminishing correlation. It is seen in the figure

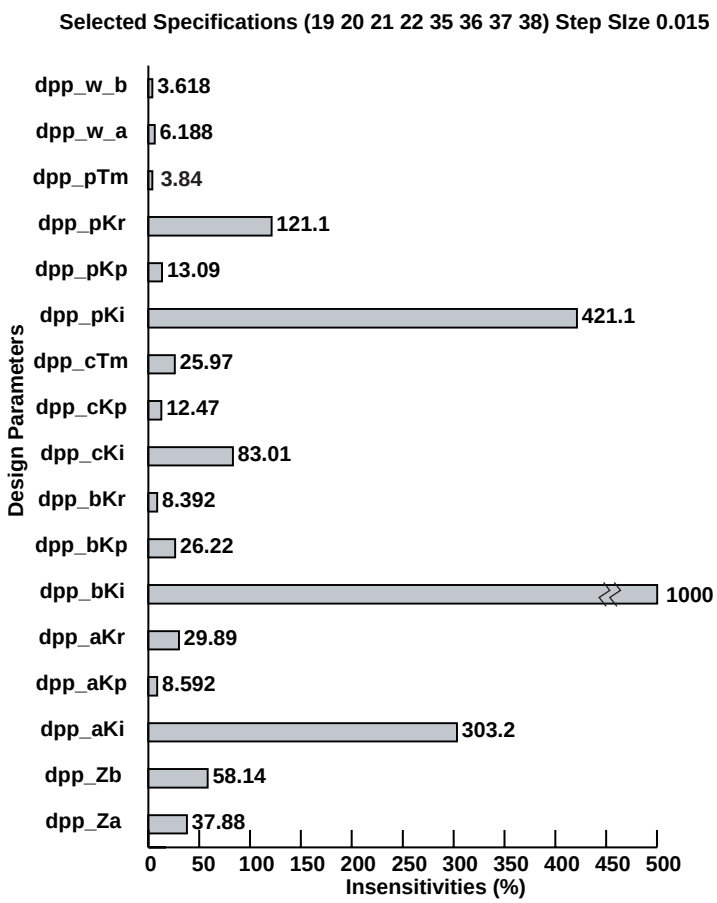

Fig. 6 Insensitivities after six iterations.

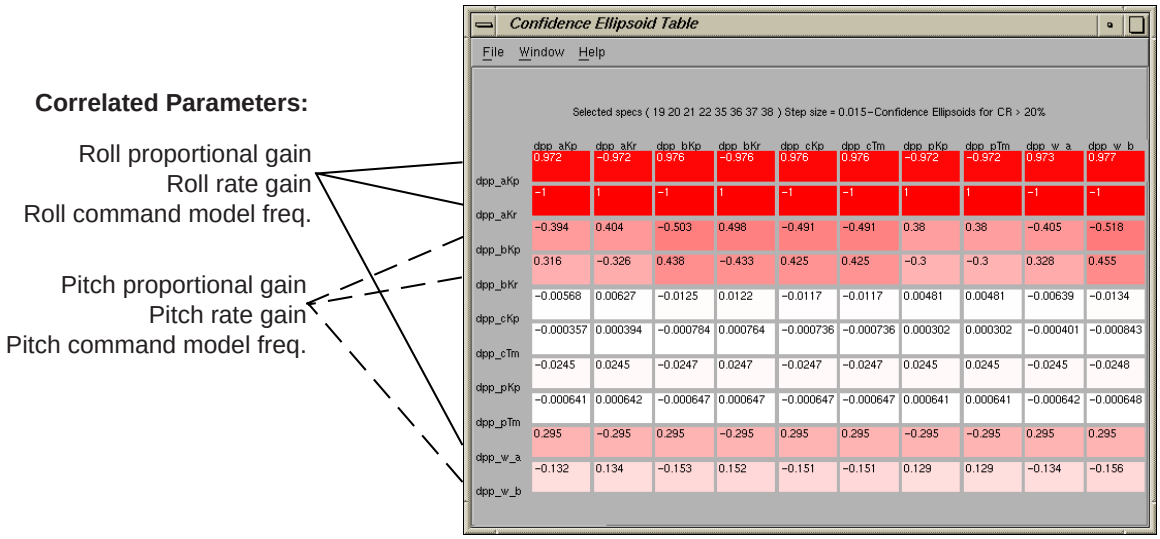

	dpp_aKp	dpp_aKr	dpp_bKp	dpp_bKr	dpp_cKp	dpp_cTm	dpp_pKp	dpp_pTm	dpp_w_a	dpp_w_b
dpp_aKp	0.972	-0.972	0.976	-0.976	0.976	0.976	-0.972	-0.972	0.973	0.977
dpp_aKr	-1	1	-1	1	-1	-1	1	1	-1	-1
dpp_bKp	-0.394	0.404	-0.503	0.498	-0.491	-0.491	0.38	0.38	-0.405	-0.518
dpp_bKr	0.316	-0.326	0.438	-0.433	0.425	0.425	-0.3	-0.3	0.328	0.455
dpp_cKp	-0.00568	0.00627	-0.0125	0.0122	-0.0117	-0.0117	0.00481	0.00481	-0.00639	-0.0134
dpp_cTm	-0.000357	0.000394	-0.000784	0.000764	-0.000736	-0.000736	0.000302	0.000302	-0.000401	-0.000843
dpp_pKp	-0.0245	0.0245	-0.0247	0.0247	-0.0247	-0.0247	0.0245	0.0245	-0.0245	-0.0248
dpp_pTm	-0.000641	0.000642	-0.000647	0.000647	-0.000647	-0.000647	0.000641	0.000641	-0.000642	-0.000648
dpp_w_a	0.295	-0.295	0.295	-0.295	0.295	0.295	-0.295	-0.295	0.295	0.295
dpp_w_b	-0.132	0.134	-0.153	0.152	-0.151	-0.151	0.129	0.129	-0.134	-0.156

Fig. 7 Correlated parameters

that the pitch channel proportional gain, rate gain, and command model frequency are correlated with all other parameters, as are the same parameters in the roll channel. The pitch channel proportional gain (dpp_bKp) and the roll channel rate gain (dpp_aKr) are also more insensitive than the parameters with which they are correlated. After these two parameters were frozen, the CONDUIT optimization process was able to achieve further reduction in the summed objective specification.

Final Optimization Results

After a total of 29 iterations, no additional progress could be made in the optimization, and a solution was obtained. All of the specifications were satisfied in the Level 1 region, while actuator energy and crossover frequency were minimized. To verify that the solution was at least locally optimal, the CONDUIT Sensitivity Tools were used to plot specification values at successive design points along the optimization trajectory, as shown in Fig. 8. The specifications plotted in Fig. 8 are the summed objective and the component specifications that made up the summed objective. The CONDUIT optimization works to minimize the summed objective, without violating any other constraints. As seen in the figure, the summed objective is within one step of a minimum, which is the resolution limit of the sensitivity analysis. The system is thus acceptably optimized. Table 1 shows the difference between the baseline gain values and the values arrived at by the optimization.

Figure 9 compares the performance of the SH-2F control system with baseline gains to the system after CONDUIT optimization; the baseline configuration is shown with open symbols/light lines, while the optimized solution is shown with filled symbols/heavy lines. Yaw bandwidth and time delay (BnwYaH2) has been improved from Level 2 to Level 1, as has coupling between pitch and roll (CouPRH1). A reduction in actuator energy (EngAcG1) has been achieved for all channels, with a substantial improvement in the pitch channel. Comparing the baseline pitch actuator energy to the optimized performance shown in Fig. 10, it can be seen that the actuator rate and position responses to a simple impulse command have been reduced by more than half.

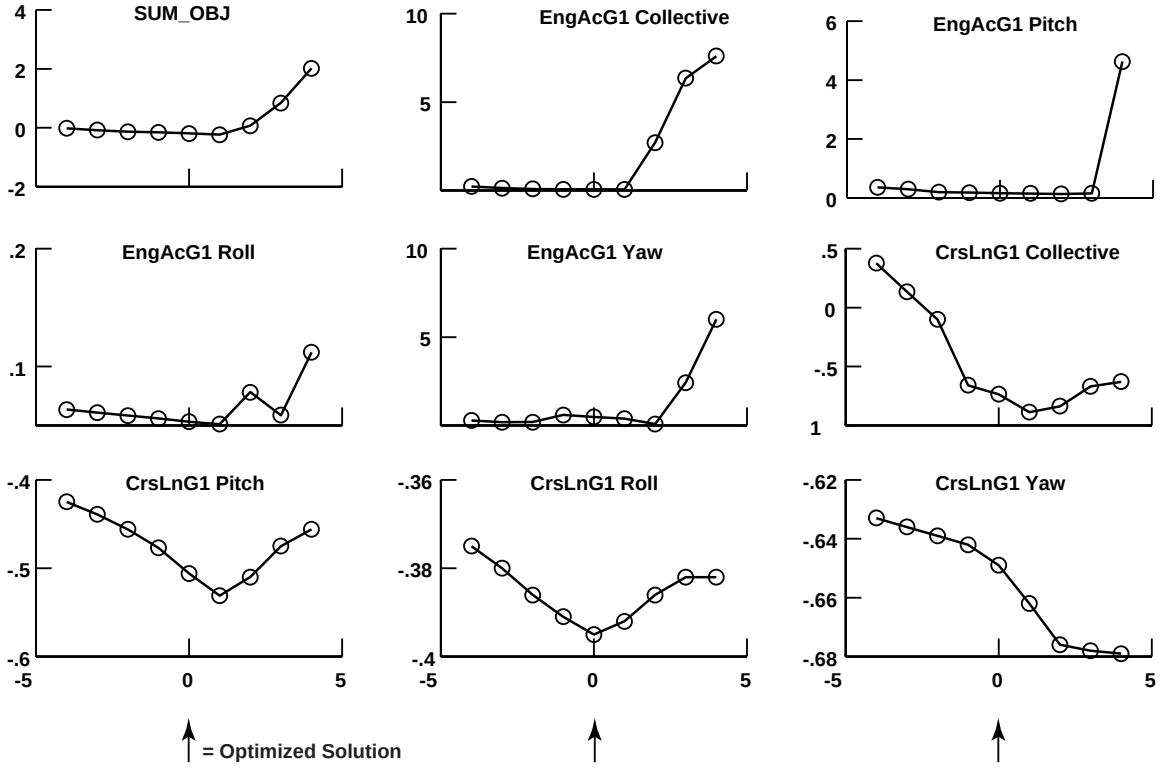

Fig. 8 1-D sensitivity plots.

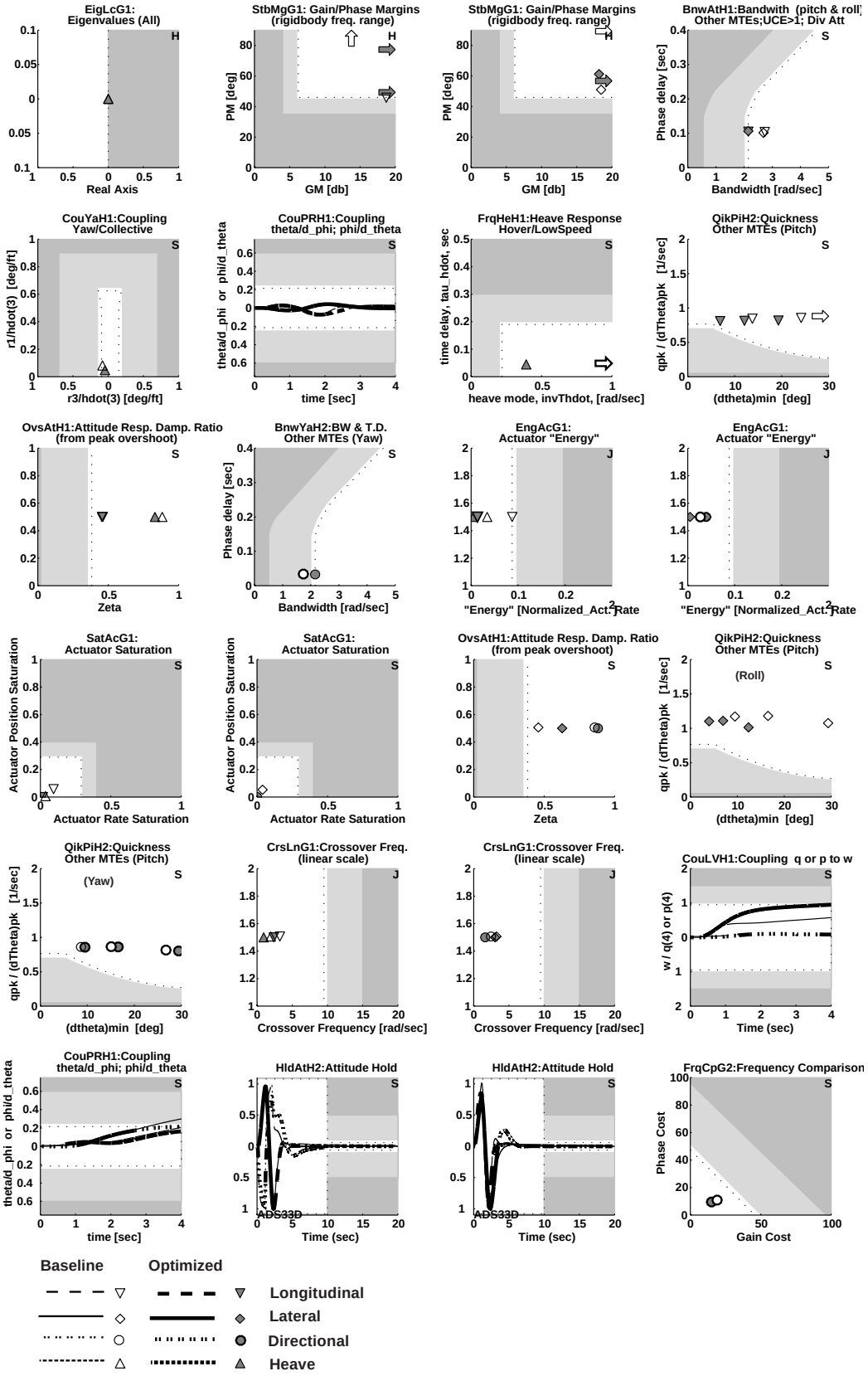

Fig. 9 Comparison of optimized system to baseline.

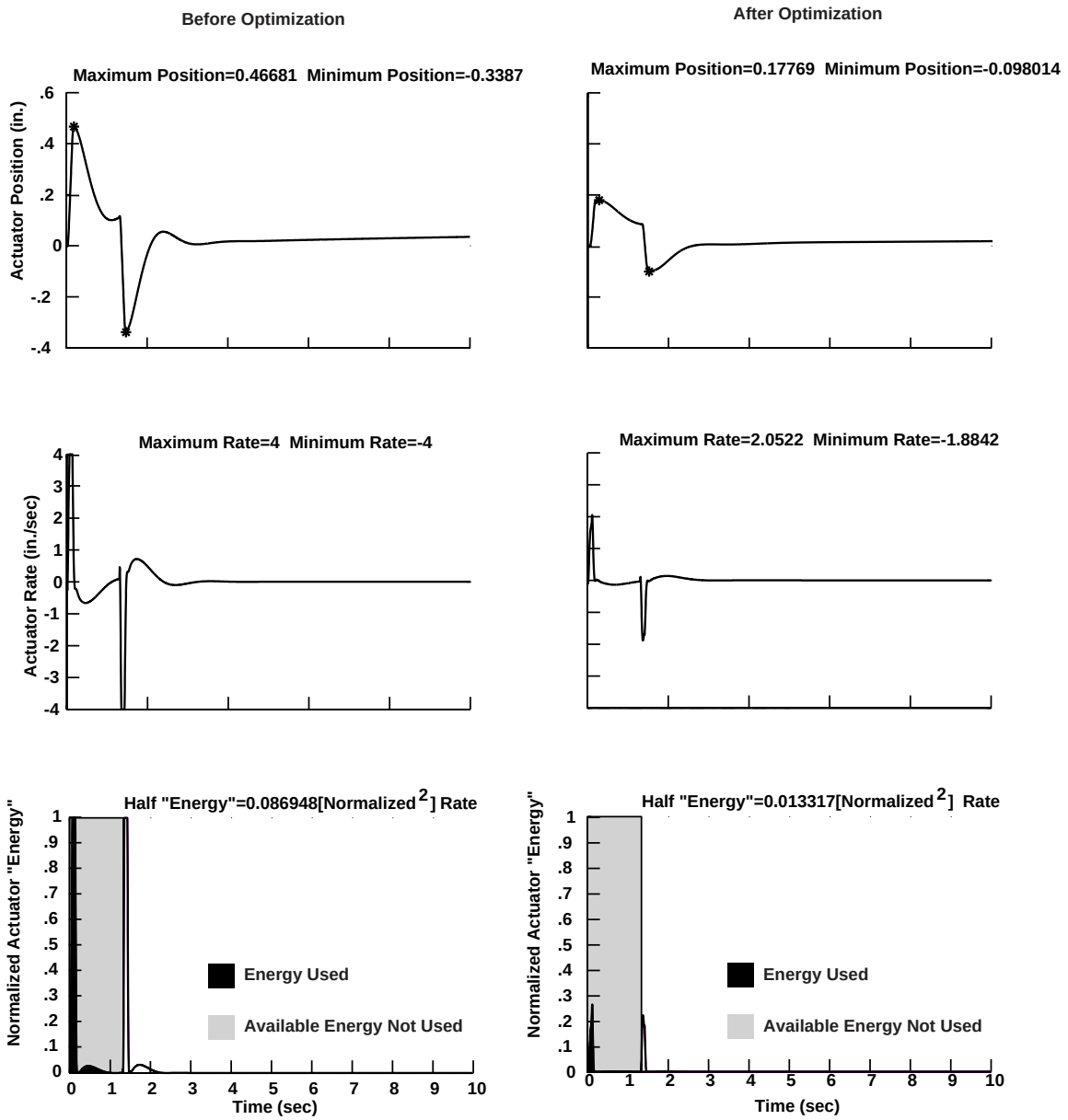

Fig. 10 Comparison of optimized to baseline pitch actuator energy.

Design Study for the RASCAL Black Hawk in Hover

The Army/NASA Rotorcraft Division at Ames Research Center is currently developing the Rotorcraft Aircrew Systems Concepts Airborne Laboratory (RASCAL).[4] RASCAL is the continuation of the ADOCS fly-by-light FCS demonstration program performed from 1981 to 1988.[15] The RASCAL aircraft (Fig. 11) is the modified Sikorsky JUH-60A Black Hawk helicopter used for ADOCS. The RASCAL FCS is a fly-by-wire full authority model-following control system based on the ADOCS Black Hawk control laws.[15] This design study focuses on a detailed model of the RASCAL JUH-60A Black Hawk in hover.

Description of Helicopter and Control Laws

A highly accurate representation of the RASCAL Black Hawk dynamics in hover was developed for this study. A high-order state-space Black Hawk airframe model and

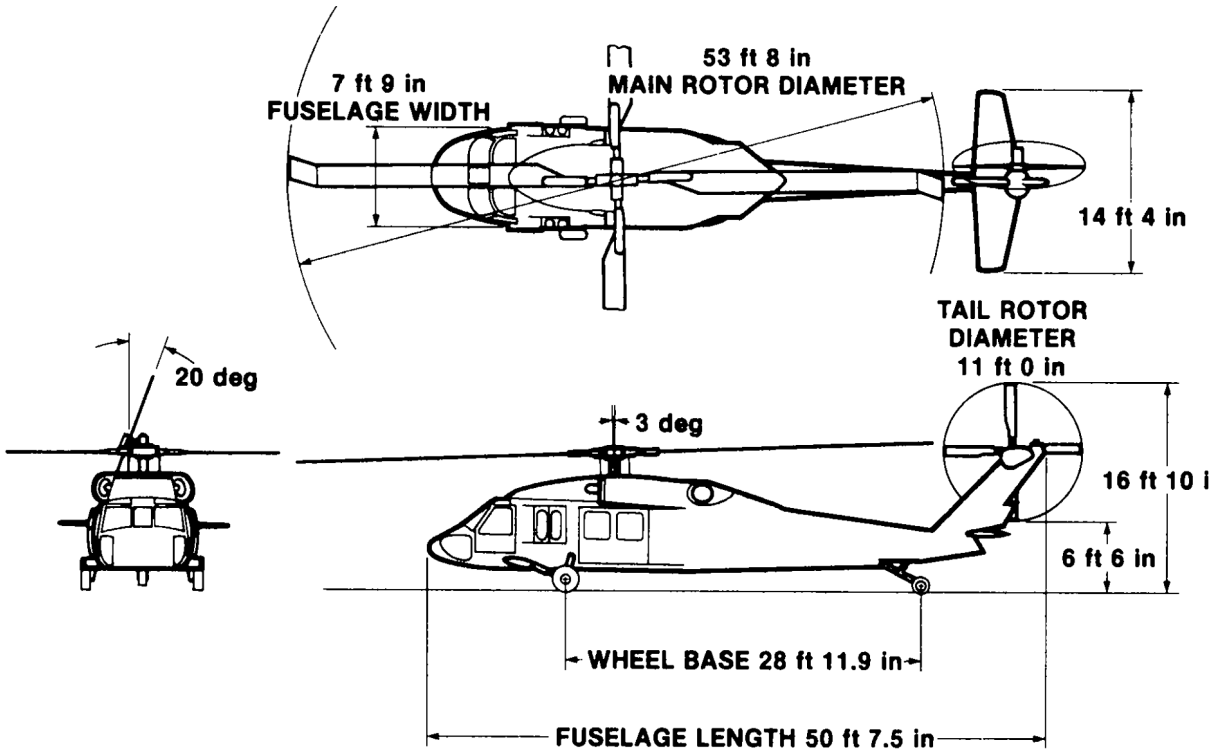

Fig. 11 RASCAL Black Hawk helicopter.

rotor system were obtained from FORECAST,[16] which numerically extracts a perturbation model from the full nonlinear GENHEL simulation.[17] The FORECAST-generated state space model contains 39 states with an off-axis correction using aerodynamic phase lag that matches flight data for the UH-60.[16] The fly-by-wire control laws are exactly those from the flight software used in the RASCAL helicopter. These are the baseline control laws provided by the contractor (Boeing) and flown in ADOCS.[15] The RASCAL flight control system operates the RASCAL research actuators, which drive the Black Hawk's primary servos. While earlier CONDUIT design studies incorporated dynamic crossfeeds in the FCS model,[2] the actual RASCAL FCS does not. Crossfeeds were not used in this study.

Nonlinear models of the four research actuators and the four primary servos were included. The primary servos and research actuators were modeled in CIFER (Ref. 18) and fitted to frequency sweep data from flight test[19] and data provided by the manufacturer, Moog Inc. Additionally, the sensor dynamics of the laser ring gyro Inertial Navigation Unit (INU), flight computer delay, asynchronous delay, zero-order hold delay, and actuator delay were included in the model as reported by Boeing.

The RASCAL control laws are designed for use as an in-flight simulator. Consequently, the RASCAL control system is a model-following design based on the ADOCS control laws.[15] A simplified schematic representation of the RASCAL control law architecture is shown in Fig. 12.

The longitudinal and lateral channels are attitude command with trim follow-up, which causes the system to behave as a rate command system at low frequencies. The directional and heave channels are rate command. Nine design parameters were selected; three of them define the hover command model for the lateral (dpp_Mphi), longitudinal (dpp_Mth), and directional channels (dpp_Mpsi). The transfer function representation of the command models for the lateral, longitudinal, and directional channels are given in Eqs. 1–3:

$$\frac{\phi_c}{\phi_m} = \frac{\mathrm{dpp_Mphi}^2}{(s + \mathrm{dpp_Mphi})^2} \tag{1}$$

$$\frac{\theta_c}{\theta_m} = \frac{\mathrm{dpp_Mth}^2}{(s + \mathrm{dpp_Mth})^2} \tag{2}$$

$$\frac{\psi_c}{\psi_m} = \frac{\mathrm{dpp_Mpsi}}{s(s + \mathrm{dpp_Mpsi})} \tag{3}$$

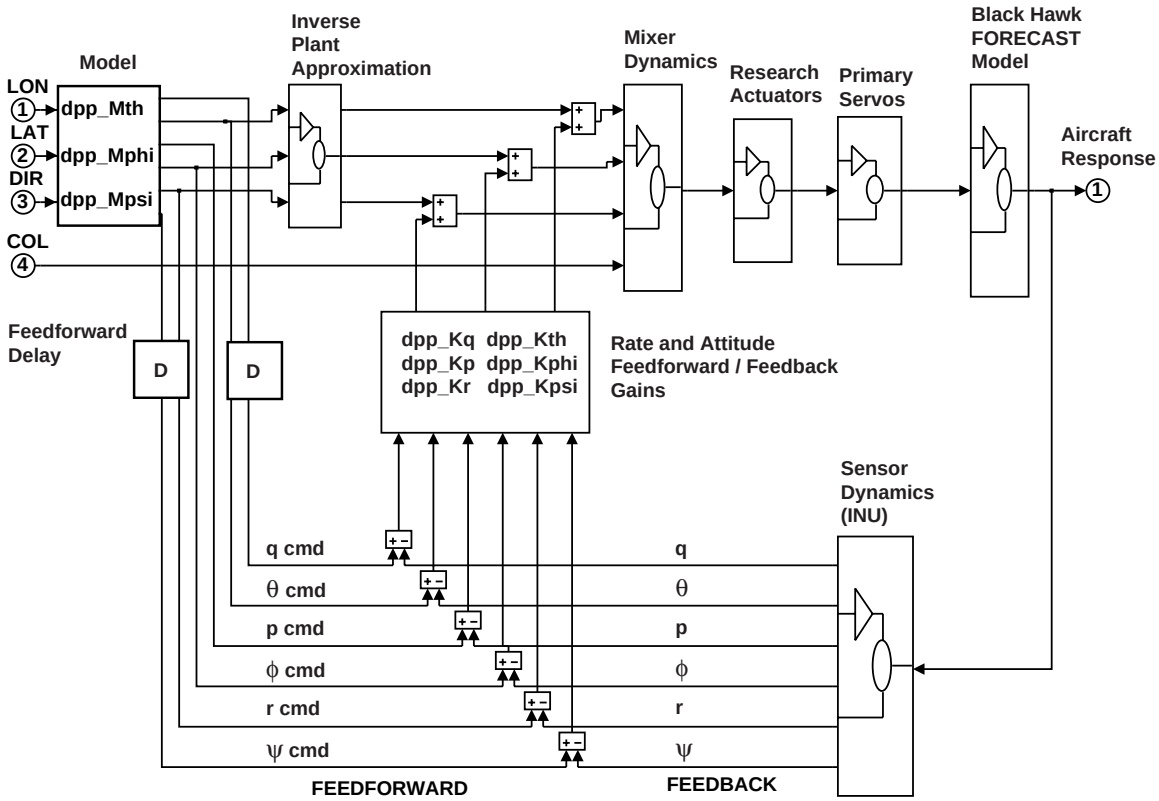

Fig. 12 RASCAL model-following control system block diagram.

The natural frequencies of the lateral and longitudinal command models are set by dpp_Mphi and dpp_Mth, respectively. The inverse time constant for the directional channel is set by dpp_Mpsi.

Six additional design parameters were used to represent the proportional (dpp_Kphi, dpp_Kth, dpp_Kpsi) and rate (dpp_Kp, dpp_Kq, dpp_Kr) feedback gains for the lateral, longitudinal, and directional feedback/feedforward loops.

Selection of Specifications

In this case study, the RASCAL control laws were evaluated against the ADS-33 (Ref. 1) hover and low-speed specifications. Specifications appropriate to a degraded visual environment (UCE > 1) or for divided attention tasks were used. The selected ADS-33 (Ref. 1) specifications were:

1. Bandwidth and phase delay for small amplitude specifications (BnwAtH1, BnwYaH2, as seen in Fig. 13).

2. Attitude quickness specifications that compare the angular rate of the aircraft against attitude change for medium amplitude changes (QikPiH2, QikRoH2, QikYaH2).

3. Moderate maneuvering, minimum achievable attitude specifications for large longitudinal and lateral responses (MaxPiH5, MaxRoH5).

4. Moderate maneuvering, minimum achievable rate responses for large directional responses (MaxYaH2).

5. Specifications that limit coupling between lateral and longitudinal channels (CouPRH1) as well as directional and heave (CouYaH1).

6. A lower order equivalent system specification that limits the inverse time constant for the heave response (FrqHeH1).

Servoloop specifications were used in conjunction with the ADS-33 specifications.[1] These specifications included:

1. A stability margin specification (StbMgG1) and a crossover frequency specification (CrsLnG1) for the lateral, longitudinal, and directional feedback loops.

2. An actuator energy specification (EngAcG1) and an actuator saturation specification (SatAcG1) for the forward, aft, lateral, and tail research actuators, but not for the primary servos since the former would saturate first.

3. An eigenvalue specification (EigLcG1) to ensure overall stability.

The eigenvalue and stability margin specifications were set as hard constraints to ensure stability of the aircraft. The ADS-33 (Ref. 1) handling qualities specifications were set as soft constraints. Finally, specifications that minimize both crossover frequency and actuator energy were selected as summed objectives in order to optimize performance.

Baseline Performance

Figure 13 shows the baseline evaluation of the RASCAL control laws for hover. (For Figs. 13 and 16 [FJC and FJE] the triangles represent longitudinal responses and loops, inverted triangles represent the lateral channel, and the directional channel is represented with diamonds.)

The baseline solution uses the nominal control law and gain values provided by the contractor, Boeing. This design is stable with excess stability margins and reasonable crossover frequencies between 2 and 3 rad/s. The bandwidth is satisfactory for pitch and roll but is Level 2 in yaw. The pitch attitude quickness specification satisfies larger attitude changes but falls inside the Level 2 region for small attitude changes. All three of the roll attitude quickness specification results are on the border of the Level 3 region. The yaw attitude quickness specification shows that the response is solidly in Level 2 for small and medium attitude changes. All other specification results lie within the Level 1 region.

Initial Optimization Results

CONDUIT was used to tune the RASCAL control laws to bring all the specifications into the Level 1 regions. Two problems were found during the optimization process:

1. CONDUIT drove the yaw command model bandwidth to frequencies above 10 rad/s and still could not meet the yaw quickness specification.

2. The high command model bandwidths were not being reflected in the end-to-end system bandwidths. This was especially evident in the roll and yaw channels.

Three modifications were required to resolve the problems. The first modification was to include control reversal in the pilot yaw command signal. Whalley[20] demonstrated improvement in the aircraft performance (as measured by the attitude quickness specification) by employing control reversal in the yaw command signal (Fig. 14). A similar modification was made to the roll channel. However, the roll channel is an attitude command channel so overshoot rather than control reversal was used in the command signal. The modified signal produced some improvement of the yaw attitude quickness specification over the baseline, but had a large beneficial effect resulting in Level 1 roll attitude quickness performance for the baseline RASCAL system.

The second modification was to improve the inverse plant for the lateral and directional channels. It was found that the cancellation was poor between the baseline RASCAL roll and yaw inverse plant approximations against the FORECAST Black Hawk model. New fits generated in the range of 1 to 10 rad/s reduced the cost function from 573 to 164 for the lateral channel, and from 1058 to 33 for the yaw channel (Fig. 15). Improved first-order approximations are given for roll (Eq. 4) and yaw (Eq. 5).

$$\frac{p}{\delta_{lat}} = \frac{1.6507}{s + 0.38}, \text{(rad/sec/in)} \tag{4}$$

$$\frac{r}{\delta_{ped}} = \frac{0.426}{s + 0.188}, \text{(rad/sec/in)} \tag{5}$$

The new inverse plant approximations significantly improved the model following for both lateral and directional channels. Although a second-order fit for the lateral channel would do a better job of approximating the aircraft dynamics,[21] it would require modifying the RASCAL control system architecture and was therefore not used.

After these two modifications, the yaw quickness specification was still unattainable for the RASCAL helicopter. This resulted from rate saturation of the actuators, a phenomenon also observed by Takahashi.[22] The third modification was to reduce the boundaries of the yaw quickness specification to approximate the pitch quickness specification, as in the SH-2F study. CONDUIT was then able to tune the parameters in the

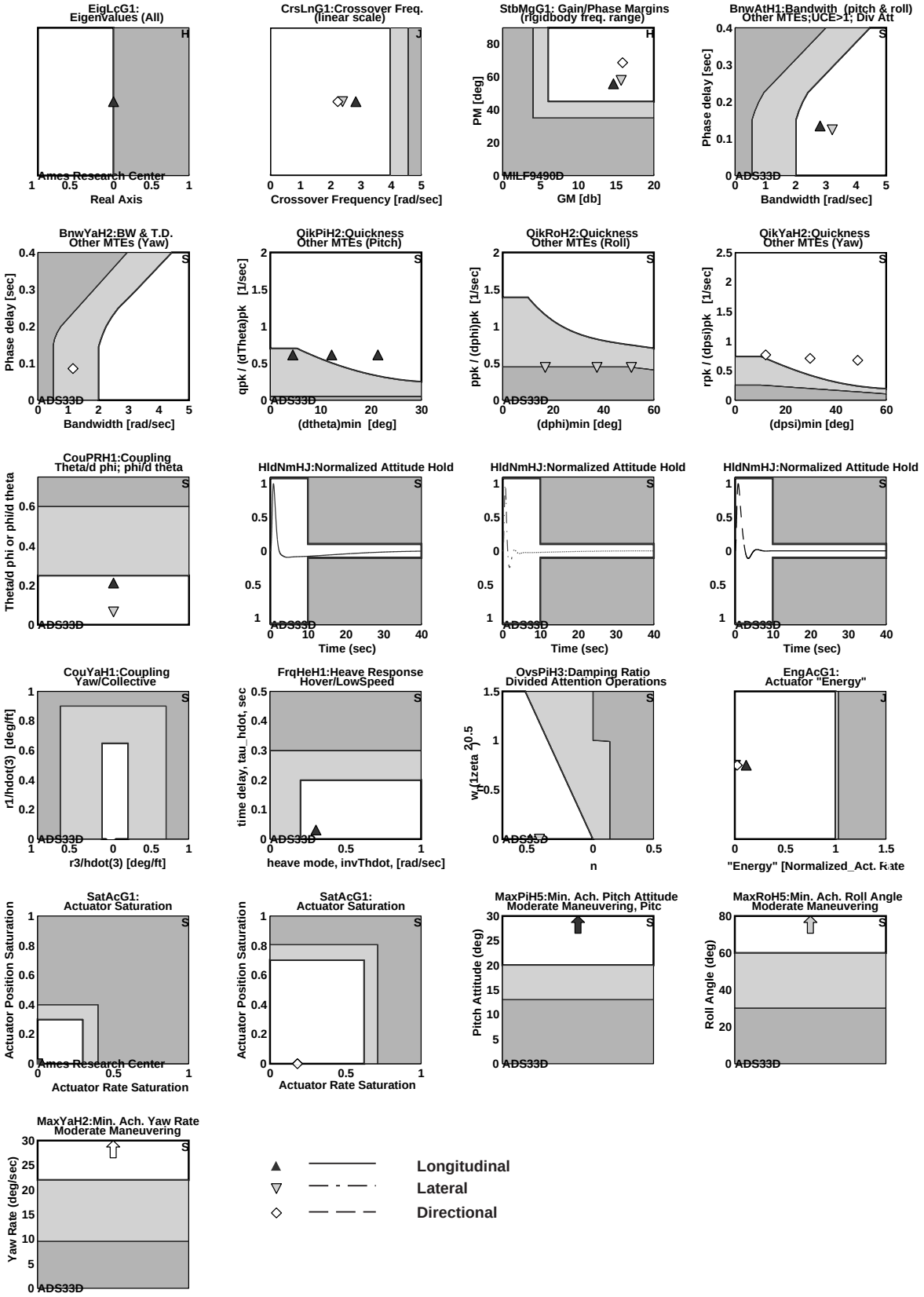

Fig. 13 Baseline RASCAL control law evaluation.

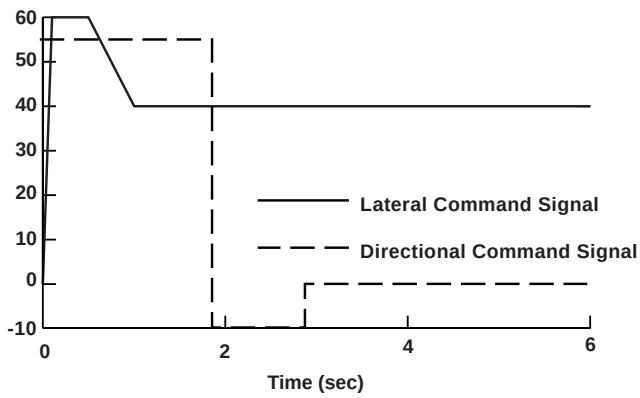

Fig. 14 Lateral command signal with overshoot and directional command signal with control reversal.

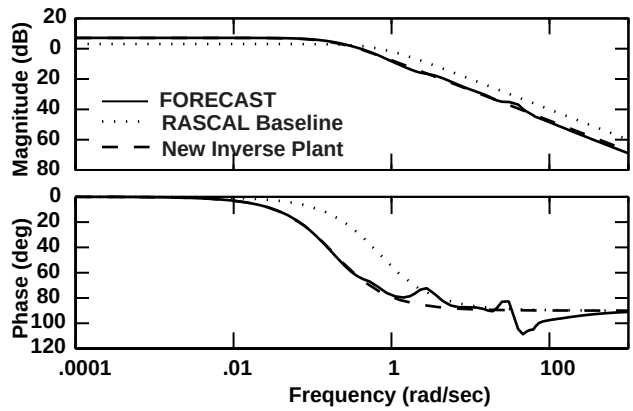

Fig. 15 FORECAST response with first-order transfer function fits of the directional channel between 0.1 and 1 rad/s.

RASCAL problem to satisfy all of the specifications. The crossover frequency and actuator specifications were used as objective functions in order to optimize performance for best use of the available control power.

Final Optimization Results

The specification results for the optimized RASCAL design are shown in Fig. 16. Level 1 handling qualities were achieved by increasing the pitch and yaw command model bandwidths. Once the Level 1 requirements were met, CONDUIT minimized actuator energy and crossover frequency while maintaining Level 1 handling qualities.

The pitch and roll attitude quickness specifications limited the reduction of the command model bandwidth to 2.4 rad/s for both channels (Table 2). The aircraft bandwidth generally tracked the command model (BnwAtH1). Further reduction in the crossover frequency is limited in the pitch channel by the attitude hold (HldNmH1) specification and in the roll channel by the ϕ/δ_{lon} coupling specification (CouPRH1).

The yaw channel had good plant cancellation, resulting in better model following than for the pitch and roll channels; this performance is demonstrated by a model bandwidth of 2.3 rad/s and a system bandwidth of 2.6 rad/s (BnwYaH2). Although the yaw bandwidth is not against the Level 1/Level 2 boundary, the yaw command model is limited by the aircraft bandwidth.

Design Margin Trade-off Study

A trade-off study was performed for the RASCAL design by looking at the effect on performance of varying the design margin. Design margins ranging from 5% to 20% were added to the baseline solution (Fig. 13) to over-design the system. For each design margin, optimization was performed to tune the system to meet Level 1 handling qualities and then minimize actuator energy and crossover frequency.

The longitudinal channel required an increase in the command model frequency with increasing design margin (Fig. 17), driven by the pitch attitude quickness specification. Higher aircraft bandwidth (Fig. 18) was required to meet the quickness design margin. Increasing the command model bandwidth results in an increase in the actuator energy (Fig. 19) and actuator saturation (Fig. 20). CONDUIT was able to reduce actuator energy until the attitude quickness rested on the design margin boundary. These plots demonstrate that exceeding the minimum Level 1 requirements of the bandwidth and quickness specifications can overdrive the actuators. The attitude hold specification has a narrow Level 2 region, which dilutes the influence of design margin. Therefore the crossover frequency is generally invariant to increasing design margin.

The lateral channel decreased in model bandwidth, yet system bandwidth was increased to satisfy the quickness requirements. The effect of increasing design margin on the ϕ/δ_{lon} coupling specification (CouPRH1) forced higher

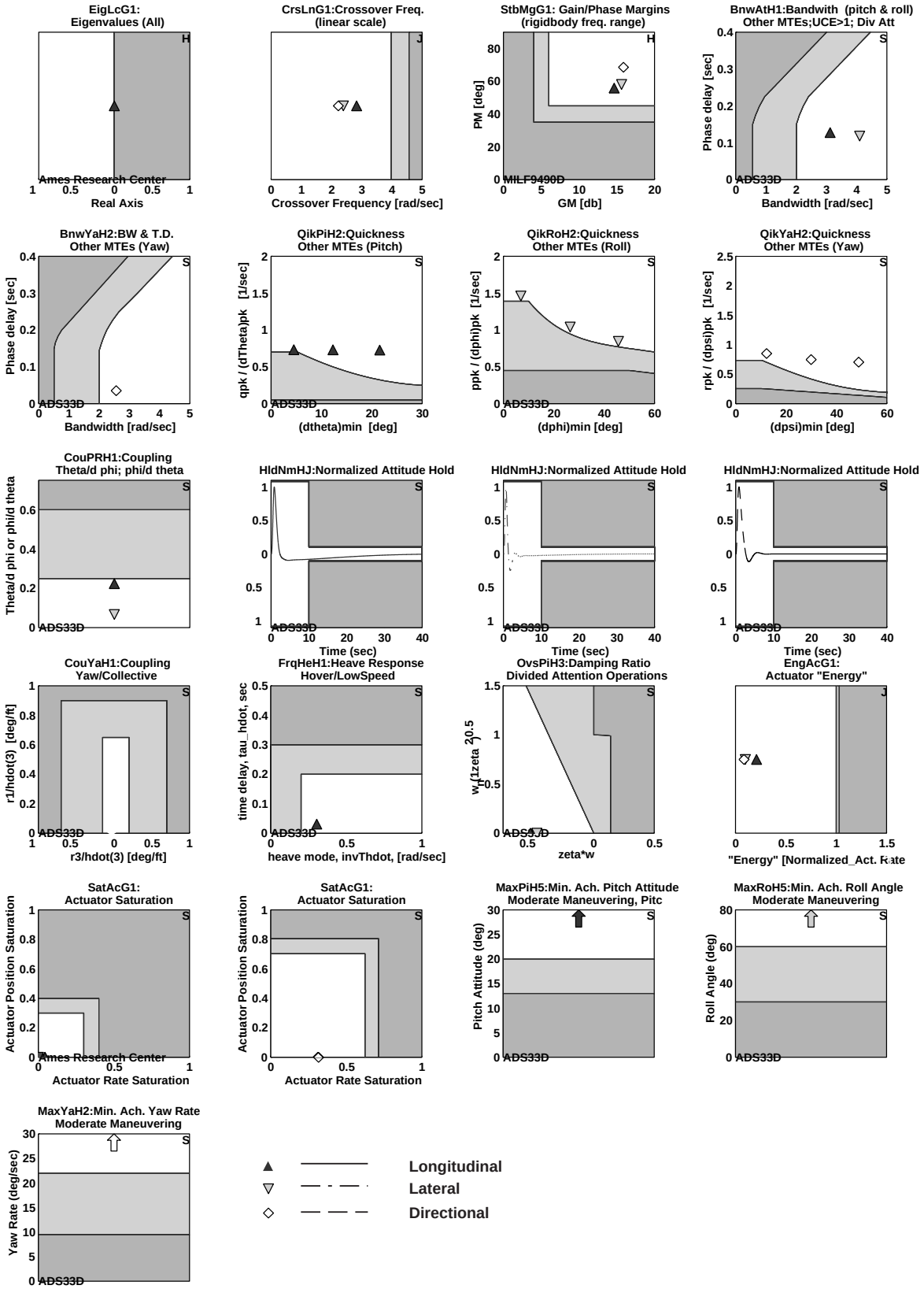

Fig. 16 Optimized RASCAL control law evaluation.

Table 2 RASCAL Design Parameters

Design Parameter	Control Channel	Function of Parameter	Baseline Value	Optimized Value	Change (%)
dpp_Mth	Pitch	Natural frequency in command model	2.0	2.4	21
dpp_Mphi	Roll	Natural frequency in command model	2.54	2.4	–3
dpp_Mpsi	Yaw	Inverse time constant in command model	2.0	2.3	15
dpp_Kth	Pitch	Proportional gain in controller	32.8	32.8	0
dpp_Kphi	Roll	Proportional gain in controller	26.5	26.5	0
dpp_Kpsi	Yaw	Proportional gain in controller	24.0	24.0	0
dpp_Kq	Pitch	Rate gain in controller	21.5	21.5	0
dpp_Kp	Roll	Rate gain in controller	4.1	4.1	0
dpp_Kr	Yaw	Rate gain in controller	12.56	12.51	–0.4

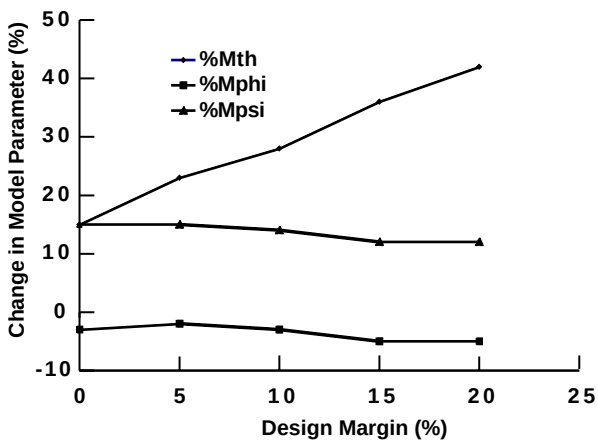

Fig. 17 Percent change of command model bandwidth with increasing design margin.

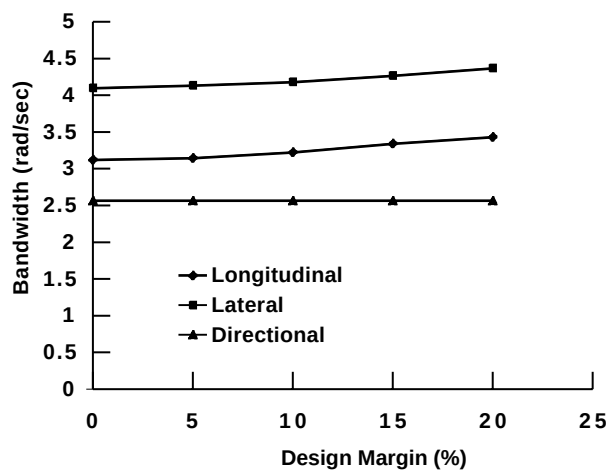

Fig. 18 Aircraft bandwidth with increasing design margin.

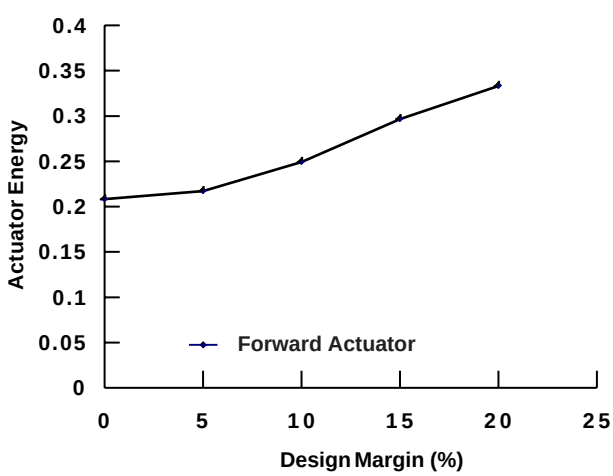

Fig. 19 Actuator energy with increasing design margin.

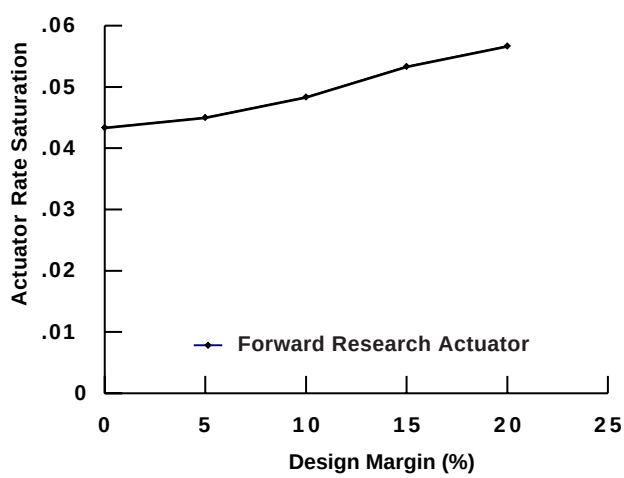

Fig. 20 Actuator saturation with increasing design margin.

roll rate and attitude feedback gains. This resulted in the lateral crossover frequency increasing with design margin (Fig. 21). The increase in aircraft bandwidth while reducing the command model bandwidth results from the increase in feedback and feedforward gains. The rise in crossover frequency (Fig. 21) shows that increasing design margin above 10% has less benefit and more cost in terms of required crossover frequency. High crossover frequencies lead to unwanted and excessive vibration in the system.

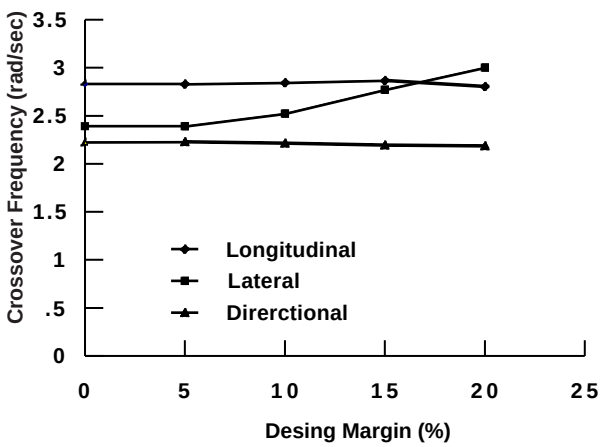

Fig. 21 Crossover frequency with increasing design margin.

From these figures, design points that improve handling qualities and increase fatigue life can be chosen. The actuator energy trade-off indicates a steeper rise in energy with increasing design margin above a 5% design margin. The 5% design margin is the best design point that ensures robustness in performance without excessive actuator energy. Actuator saturation can lead to a degradation of handling qualities and possibly lead to PIO situations. Excess actuator energy can lead to shortened fatigue life, as described in a recent article by Rozak.[23]

The yaw channel performance shows no reaction to varying design margin in the trade-off study since the quickness specification was reduced from the original level.

Conclusions

Two helicopter control systems were tuned for system performance relative to the ADS-33D handling qualities specification using the CONDUIT software package.

Optimization of a modern control system for the Kaman SH-2F helicopter showed that:

1. The SH-2 airframe could not be made to meet the ADS-33D requirements for roll and yaw quickness.

2. Reduction of the roll and yaw attitude quickness requirements allowed the aircraft to meet the Level 1 requirements of a representative selection of modern rotorcraft specifications, while minimizing actuator energy and crossover frequency.

3. CONDUIT's sensitivity analysis tools can be useful to the control system designer in constraining a large, over-parameterized problem to a form that can be successfully optimized.

The RASCAL Black Hawk design study produced the following observations:

1. The baseline RASCAL design indicates Level 2 handling qualities for the ADS-33D pitch, roll, and yaw attitude quickness specifications and the yaw bandwidth specification. CONDUIT was able to tune the RASCAL control law gains to meet all specifications except for yaw attitude quickness.

2. Improved first-order inverse plant models generated greater model-following performance for the lateral and directional channels.

3. A design margin trade-off study indicated that exceeding the ADS-33D specifications, while improving performance, could lead to objectionable actuator activity and saturation. A 5% design margin for this study is the best design point for robustness in performance without excessive actuator activity.

References

[1]United States Army Aviation Systems Command, "Handling Qualities Requirements for Military Rotorcraft," ADS-33D, St. Louis, MO, 1996.

[2]Tischler, M. B., Colbourne, J. D., Morel, M. R., Biezad, D. J., Levine, W. S., and Moldoveanu, V., "CONDUIT—A New Multidisciplinary Integration Environment for Flight Control Development," AIAA Paper 97-3773, Aug. 1997.

[3]United States Navy Naval Air Systems Command, "NATOPS Flight Manual, Navy Models SH-2D/SH-2F/HH-2D Aircraft," NAVAIR 01-260HCD-1, Naval Air Systems Command, 1978.

[4]Aiken, E., Jacobsen, R., Eshow, M., Hindson, W., and Doane, D., "Preliminary Design Features of the RASCAL—A NASA/Army Rotorcraft In-Flight Simulator," AIAA Paper 92-4175, Aug. 1992.

[5]MATLAB®: High-Performance Numeric Computation and Visualization Software. The MathWorks, Inc., Reference Guide, 1992.

[6]United States Department of Defense, "Flying Qualities of Piloted Vehicles," MIL-STD-1797, 1987.

[7]Mitchell, D. G., and Hoh, R. H., "Proposed Incorporation of Mission-Oriented Flying Qualities into MIL-STD 1797A," WL-TR-94-3162, Oct. 1994.

[8]Franklin, J. A., and Stortz, M. W., "Moving Base Simulation Evaluation of Translational Rate Command Systems for STOVL Aircraft in Hover," NASA TM-110399, June 1996.

[9]United States Department of Defense, Military Specification, Flight Control Systems—General Specifications for Design, Installation, and Test of Piloted Aircraft, MIL-F-9490D, 1975.

[10]Panier, E. R., and Tits, A. L., "On Combining Feasibility, Descent, and Superlinear Convergence in Equality Constrained Optimization," *Mathematical Programming*, vol. 59, 1993, pp. 261–276.

[11]Lawrence, C., Zhou, J. L., and Tits, A. L., "User's Guide for CFSQP Version 2.4: A C Code for Solving (Large Scale) Constrained Nonlinear (Minimax) Optimization Problems, Generating Iterates Satisfying All Inequality Constraints," University of Maryland, College Park, MD, 1996.

[12]Tomashofski, C. A., and Tischler, M. B., "Flight Test Identification of SH-2G Dynamics in Support of Digital Flight Control System Development," American Helicopter Society 55th Annual Forum, Montreal, QUE, May 1999.

[13]Ringland, R. F., and Clement, W. F., "NAVTOLAND Rotary Wing Program, SH-2F Control Laws Development, Volume I: Analytical Development," Systems Technology Inc. Technical Report 1177-1-I, 1982.

[14]Frost, C. R., "Design and Optimization of a Rotorcraft Flight Control System using the Control Designer's Unified Interface," Master's Thesis, Cal Poly, 1999.

[15]Glusman, S. I., Conover, H. W., and Black, T. M., "Advanced Digital Optical Control System (ADOCS)," USAAVSCOM TR 90-D-11-C, Nov. 1990.

[16]Rosen, A., Yaffe, R., Mansur, M. H., and Tischler, M. B., "Methods for Improving the Modeling of Rotor Aerodynamics for Flight Mechanics Purposes," presented at the 54th Annual AHS Forum, May 1998.

[17]Howlett, J. J., "UH-60A Black Hawk Engineering Simulation Program: Volume I—Mathematical Model," NASA CR-166309, 1981.

[18]Tischler, M. B.; and Cauffman, M. G., "Frequency Response Method for Rotorcraft System Identification: Flight Applications to BO 105 Coupled Rotor/Fuselage Dynamics," *J. Am. Helicopter Soc.*, vol. 37, no. 3, 1992, pp. 3–17.

[19]Cicolani, L. S., McCoy, A. H., Tischler, M. B., Tucker, G. E., Gatenio, P., and Marmar, D., "Flight-Time Identification of UH-60A Helicopter and Slung Load," NASA TM-112231, April 1998.

[20]Whalley, M. S., "A Piloted Simulation Investigation of Yaw Attitude Quickness in Hover and Yaw Bandwidth in Forward Flight," NASA TM-103948, Sept. 1992.

[21]Takahashi, M. D., "Flight Control Design Using Rotor-State Feedback for an Articulated Rotor Helicopter in Hover," NASA TM-103967, Jan. 1993.

[22]Takahashi, M. D., "Design of Flight-Control Laws for a UH-60 Helicopter in Hover Using an H2 Loop-Shaping Synthesis Method," NASA TM-103834, Dec. 1991.

[23]Rozak, J. N., and Ray, A., "Robust Multivariable Control of Rotorcraft in Forward Flight: Impact of Bandwidth on Fatigue Life," *J. Am. Helicopter Soc.*, vol. 43, no. 3, pp. 195–201, July 1998.